794137-1 ✔ ACTIVE

MATE-N-LOK | Mini-Universal MATE-N-LOK

TE Internal #: 794137-1

Power Contacts, Contact, Tin, 22 – 18 AWG Wire Size, .33 – .82 mm² Wire Size, Wire-to-Wire, Wire & Cable, Crimp, Power, Mini-Universal MATE-N-LOK

View on TE.com >

Connectors > Power Connectors > Power Contacts

Power Contact Type: **Contact**

Contact Mating Area Plating Material: **Tin**

Wire Size: **.33 – .82 mm²**

Connector System: **Wire-to-Wire**

Features

Product Type Features

Power Contact Type	Contact
Connector System	Wire-to-Wire
Connector & Contact Terminates To	Wire & Cable

Contact Features

Contact Mating Area Plating Material	Tin
Contact Type	Socket
Contact Retention Within Housing	With
Mating Pin Diameter	1.57 mm[.062 in]
Contact Base Material	Brass
Wire Contact Termination Area Plating Thickness	2.54 µm[100 µin]
Wire Contact Termination Area Plating Material	Pre-Tin
Wire Contact Termination Area Plating Material Finish	Bright
Contact Orientation	Straight

Termination Features

Termination Method to Wire & Cable	Crimp

Mechanical Attachment

Connector Mounting Type	Cable Mount (Free-Hanging)
Wire Insulation Support	Without

Dimensions

Wire Size	.33 – .82 mm²
Accepts Wire Insulation Diameter Range	1.5 – 2.39 mm[.059 – .094 in]

Usage Conditions

Operating Temperature Range	-55 – 105 °C[-67 – 221 °F]

Operation/Application

Circuit Application	Power

Industry Standards

CSA Rating	Certified
Glow Wire Rating	Standard Part - Not Glow Wire
VDE Tested	No
Agency/Standard	CSA, UL
CSA File Number	LR 7189
UL Rating	Recognized
UL File Number	E28476

Packaging Features

Packaging Method	Reel
Packaging Quantity	4500

Other

Wire/Cable Type	Discrete Wire
Wire Type	Stranded
For Use With	Plug Housing
Comment	With locking lance.

Product Compliance

For compliance documentation, visit the product page on TE.com>

EU RoHS Directive 2011/65/EU	Compliant
EU ELV Directive 2000/53/EC	Compliant

China RoHS 2 Directive MIIT Order No 32, 2016	No Restricted Materials Above Threshold
EU REACH Regulation (EC) No. 1907/2006	Current ECHA Candidate List: JUNE 2022 (224) Candidate List Declared Against: JUNE 2022 (224) Does not contain REACH SVHC
Halogen Content	Low Halogen - Br, Cl, F, I < 900 ppm per homogenous material. Also BFR/CFR/PVC Free
Solder Process Capability	Not applicable for solder process capability

Product Compliance Disclaimer

This information is provided based on reasonable inquiry of our suppliers and represents our current actual knowledge based on the information they provided. This information is subject to change. The part numbers that TE has identified as EU RoHS compliant have a maximum concentration of 0.1% by weight in homogenous materials for lead, hexavalent chromium, mercury, PBB, PBDE, DBP, BBP, DEHP, DIBP, and 0.01% for cadmium, or qualify for an exemption to these limits as defined in the Annexes of Directive 2011/65/EU (RoHS2). Finished electrical and electronic equipment products will be CE marked as required by Directive 2011/65/EU. Components may not be CE marked. Additionally, the part numbers that TE has identified as EU ELV compliant have a maximum concentration of 0.1% by weight in homogenous materials for lead, hexavalent chromium, and mercury, and 0.01% for cadmium, or qualify for an exemption to these limits as defined in the Annexes of Directive 2000/53/EC (ELV). Regarding the REACH Regulation, the information TE provides on SVHC in articles for this part number is based on the latest European Chemicals Agency (ECHA) 'Guidance on requirements for substances in articles' posted at this URL: https://echa.europa.eu/guidance-documents/guidance-on-reach

Compatible Parts

TE Part # 90759-1
PROCRIMP TL W/DIE MIN UNIV MNL

TE Part # 189727-1
EXTRACTION TOOL

TE Part # 455830-1
INSERTION TOOL

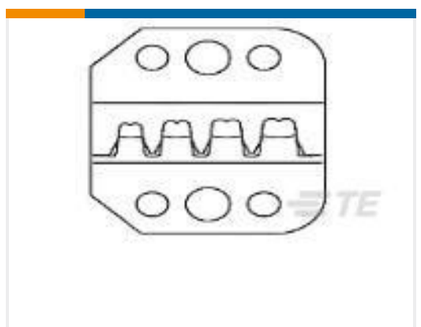

TE Part # 90759-2
PROCRIMP DIE MINI UNIV MNL

TE Part # 2305570-1
Strip Terminal Cutter-Side Feed-No Crimp

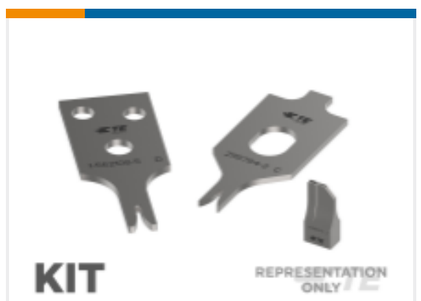

TE Part # 7-2151030-7
OCEAN_2.0_SPARE_PART_KIT-062F110F

TE Part # 2151030-1
OCEAN_2.0_APPLICATOR-S-062F110F

TE Part # 2-2151030-1
OCEAN_2.0_APPLICATOR-S-062F110F

TE Part # 2-2151030-2
OCEAN_2.0_APPLICATOR-S-062F110F

TE Part # 2151030-2
OCEAN_2.0_APPLICATOR-S-062F110F

TE Part # 5-2151030-1
OCEAN_2.0_APPLICATOR-S-062F110F

TE Part # 5-2151030-2
OCEAN_2.0_APPLICATOR-S-062F110F

TE Part # 7-2151030-1
OCEAN_2.0_APPLICATOR-S-062F110F

TE Part # 7-2151030-2
OCEAN_2.0_APPLICATOR-S-062F110F

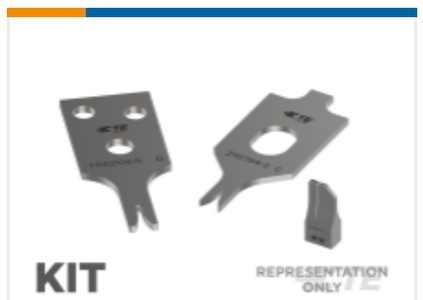

TE Part # 7-2266248-7
OC-062F110F-752-CRIMPTOOLINGKIT

Also in the Series | Mini-Universal MATE-N-LOK

Connector Contacts(11)

Insertion & Extraction Tools(1)

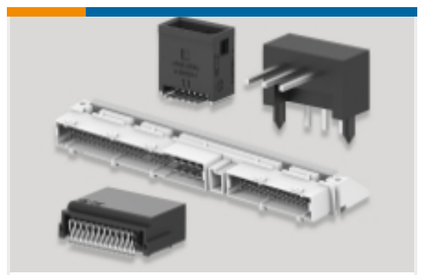

PCB Headers & Receptacles(1)

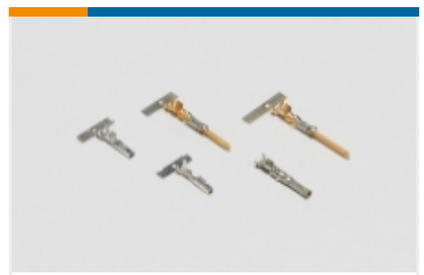

Power Contacts(85)

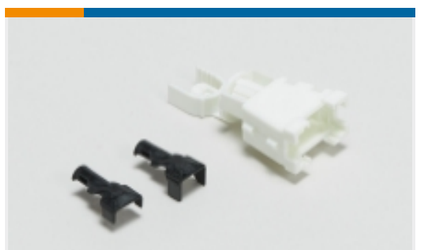

Rectangular Backshells & Clamps(2)

Rectangular Boots & Strain Relief(2)

Rectangular Connector Keying Plugs(2)

Rectangular Connector Locking(2)

Rectangular Connector Seals(20)

Rectangular Power Connectors(283)

Documents

Product Drawings

MINI UMNL SOCKET 22-18 AWG SN

English

CAD Files

Customer View Model

ENG_CVM_CVM_794137-1_E.2d_dxf.zip

English

3D PDF

3D

Customer View Model

ENG_CVM_CVM_794137-1_E.3d_igs.zip

English

Customer View Model

ENG_CVM_CVM_794137-1_E.3d_stp.zip

English

By downloading the CAD file I accept and agree to the Terms and Conditions of use.

Product Specifications

Application Specification

English

Product Environmental Compliance

TE Material Declaration

English

Instruction Sheets

Instruction Sheet (U.S.)

English